ML5I/ML10I/ML15I

MATERIAL LIFTS

- A high specification material lift with heavy-duty load capacity
- Narrow design to manoeuvre through a standard doorway without tilting back
- Robust and reliable, built to handle the demands of the rental industry
- Features a dual handle, shift- on-the-fly, two-speed winch for improved productivity

snorkel™

www.snorkellifts.com

MATERIAL LIFTS

ML5I/ML10I/ML15I

DIMENSIONS	M5I	ML10I	ML15I
Lift height – forks up	2.0m	3.4m	4.8m
Lift height – forks down	1.4m	2.7m	4.3m
Stowed width **(A)**	0.77m	0.77m	0.77m
Stabiliser width **(B)**	1.63m	1.63m	1.63m
Stowed length	0.85m	0.85m	0.85m
Operating length **(C)**	1.57m	1.57m	1.7m
Stowed height **(D)**	1.9m	1.9m	1.9m
Fork width (outside)	0.58m	0.58m	0.58m
Fork length **(E)**	0.76m	0.76m	0.76m
Ground clearance	60mm	60mm	60mm

PERFORMANCE			
Max. load capacity (0.36m load centre)	454kg	408kg	363kg
Max. load capacity (0.61m load centre)	340kg	340kg	318kg
Max. load capacity (1.07m load centre)	159kg	159kg	147kg
Min. load height	150mm	150mm	150mm
Winch (high speed)		13.1 cranks/m	
Winch (low speed)		49.2 cranks/m	

WEIGHT			
Weight	89kg	106kg	122kg

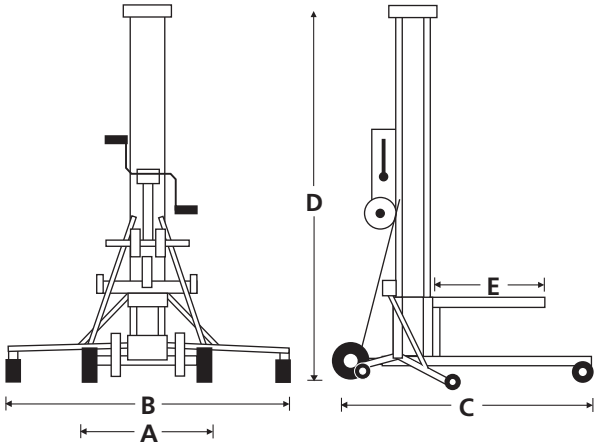

STANDARD FEATURES

- Mast brake
- Cable guard
- Smart latch system
- Non-marking transport/loading wheels
- Dual handle, two-speed shift-on-fly winch
- Metal cable pulleys with sealed bearings
- Heavy-gauge aluminium extrusions
- Heavy-duty, non-marking casters
- Crane attachment point
- 2 year parts & labour, 5 year structural warranty
- CE approved

OPTIONS

- Special paint colours
- Adjustable forks
- Boom
- Pipe cradle
- Fork extensions
- Load platform
- Stabilisers with non-marking swivel casters
- Straddle base

LOAD CAPACITY - STANDARD FORKS

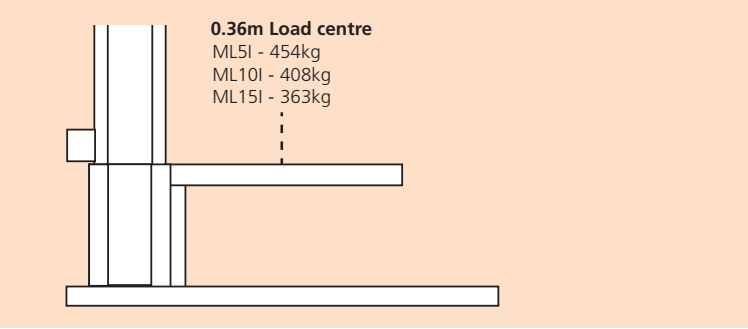

LOAD CAPACITY - EXTENDED FORKS

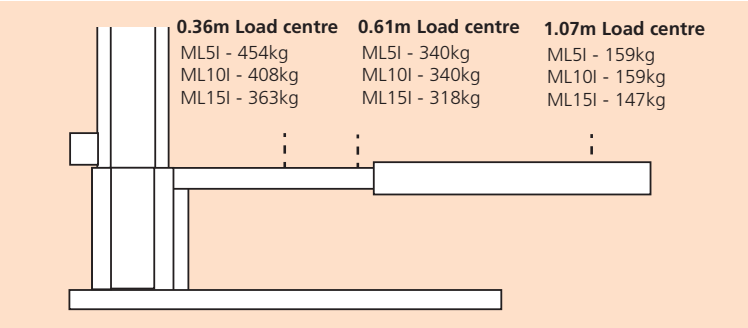

snorkel

Vigo Centre, Birtley Road,
Washington, Tyne & Wear,
NE38 9DA, U.K.

t: +44 (0) 845 1550 057
e: sales.emea@snorkellifts.com

www.snorkellifts.com

CE Specification
© Snorkel 2020

Specifications subject to change without notice. Photos and diagrams in this brochure are for promotional purposes only. Refer to appropriate Snorkel operators manual for detailed instructions on the proper use and maintenance.

02/2020